Hyundai Santa Cruz Running Boards

Installation Instruction

Thank you very much for choosing our products.
Please read the installation instruction carefully before using our product and be sure to fully understand the contents mentioned above for subsequent installation.
In addition, please keep properly the installation instruction for product maintenance in future.

Attentions

- The following symbols are used in this installation instruction.

⚠ **Caution**	**Relevant matters must be obeyed for safety. Non-compliance may result in injury or other accidents. Please read carefully and obey strictly.**
Note	**Relevant matters must be obeyed for the smooth installation and use.**

- Non-compliance may cause the problems with vehicle. Please do not install that is not recorded in this instruction.
- Please forgive that we are not responsible for any consequences arising from the installation not according to our installation instruction.

● **Product Composition** *Please confirm if it is missing.

1. Front Mount Bracket (2 piece Left and Right) 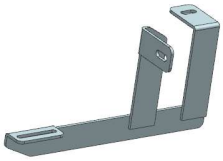	2. Mid Mount Bracket (2 piece Left and Right) 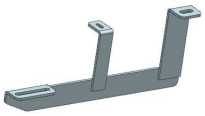	3. Rear Mount Bracket (2 piece Left and Right) 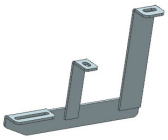	4. M10X45 T Bolts (10 pieces)	5. M10 Flat Washer (10 pieces)
6. M10 Lock Washer (10 pieces)	7. M10 Nuts(10 pieces) 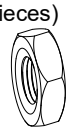	8. M6 Flat Washer (2 pieces)	9. M6 Lock Washer (2 pieces)	10. M6 Nuts(2 pieces) 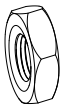
11. M10 Plastic Retainers(10 pieces)				

● **Attentions**

- The labels of fitting procedure inside the thick wireframe is particularly important. Pay attention to them in the actual installation.
- Pay attention to safety during installation.

Fitting Procedure

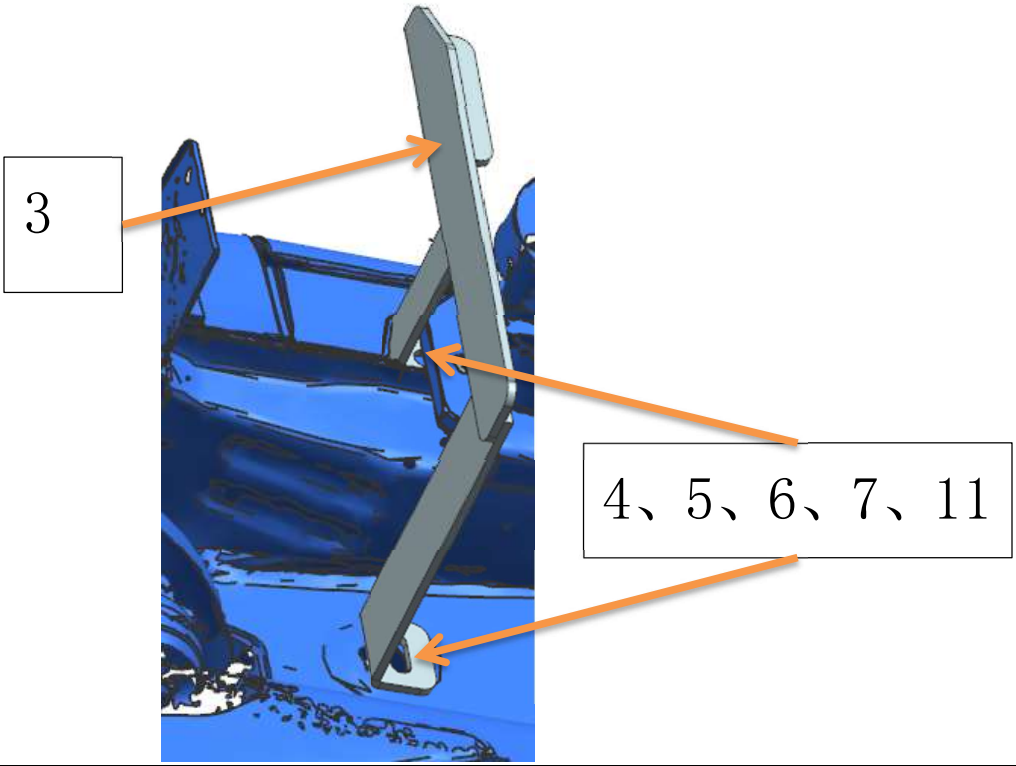

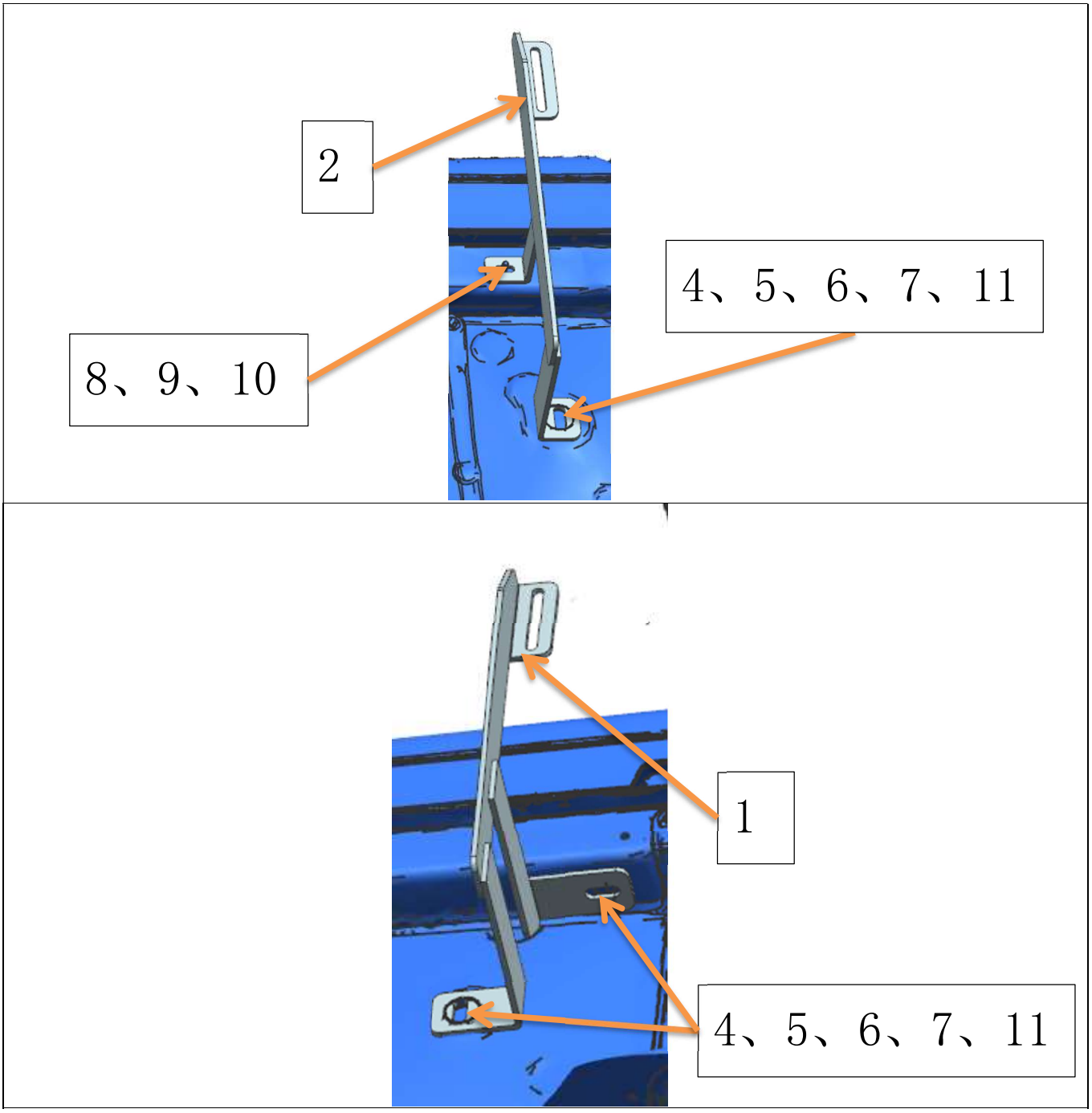

TIPS:

= **Routine Maintenance** =

1) Please use neutral detergent to wet the soft cloth or suede and so on, then clean our product.

Note

- Do not use any hard objects such as brushes. Otherwise, it will cause surface scratches.
- Please protect the product from gasoline, light fuel, fuel oil, brake fuel, engine oil, paint thinner, sulphuric acid(battery liquid), wax remover, etc. Otherwise, it will cause product discoloration and dyeing. In case product come into contact with above objects, please use neutral detergent to wet the soft cloth or suede and so on, then clean our product and wash it with water quickly.