VGUBG-1888-0841BK-LED BULL BAR
05-12 TOYOTA TACOMA

PARTS LIST:

1	Bull Bar
1	Driver/Left Frame Mounting Bracket
1	Passenger/Right Frame Mounting Bracket
2	10-1.50mm x 120mm x 30mm Hex Bolts
4	10-1.50mm x 30mm Hex Bolts
2	10mm x 30mm OD x 2.5mm Flat Washers
10	10mm x 20mm OD x 2mm Flat Washers
6	10mm Lock Washers
6	10mm Hex Nuts
4	12mm Spacer Washers

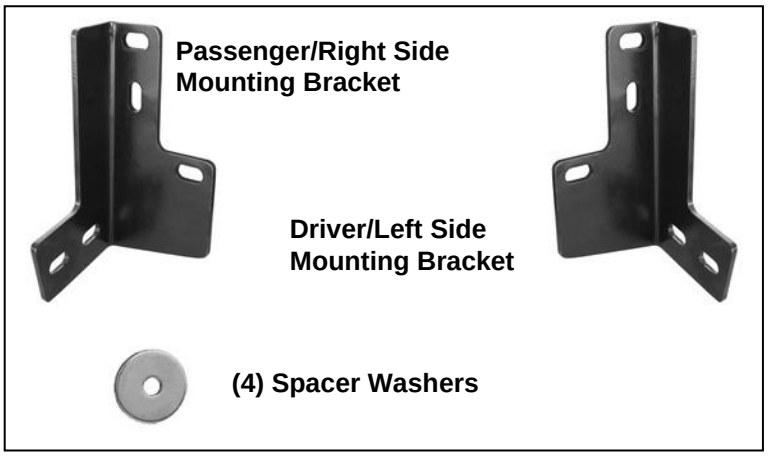

PROCEDURE:

1. **REMOVE CONTENTS FROM BOX. VERIFY ALL PARTS ARE PRESENT. READ INSTRUCTIONS CAREFULLY BEFORE STARTING INSTALLATION. NOT COMPATIBLE WITH OPTIONAL FULL COVERAGE FACTORY ALUMINUM SKID PLATE. OPTIONAL SKID PLATE MUST BE REMOVED AND CANNOT BE REINSTALLED.**
2. Start installation at the driver side, front of the vehicle and remove the (2) factory bumper mount hex nuts located toward the outside of the bumper mount and frame channel, **(Figures 1 & 7)**. **NOTE**: It may be necessary to remove the factory tow hook from the passenger side. Select the driver side frame mounting bracket and hang it from the (2) threaded studs. Secure the Bracket to the (2) threaded studs with the (2) factory hex nuts, **(Figures 2 & 7)**. Do not tighten hardware at this time.
3. Select (1) 12mm Spacer Washer. Insert the 12mm Spacer Washer between the Mounting Bracket and the frame channel, **(Figures 3, 4 & 7)**. Insert (1) 10mm x 120mm Hex Bolt and (1) 10mm x 30mm OD Large Flat Washer through the oval hole in the Mounting Bracket, the Spacer Washer and into the large hole in the end of the frame channel, **(Figures 4, 5 & 7)**. Place (1) 12mm Spacer Washer over the 10mm Hex Bolt covering the opening in the back of the frame channel. Secure the Hex Bolt to the frame channel with (1) 10mm x 20mm OD Small Flat Washer, (1) 10mm Lock Washer and (1) 10mm Hex Nut, **(Figures 4, 6 & 7)**. Snug but do not tighten all of the hardware. Repeat **Steps 2 – 3** for passenger side Mounting Bracket installation. Reinstall the factory tow hook removed in **Step 2**.
4. With assistance, line up the mounting tabs on the Bull Bar with the outside of the (2) previously installed Frame Mounting Brackets. Bolt the Bull Bar to the Frame Mounting Brackets with the included (4) 10mm x 30mm Hex Bolts, (8) 10mm x 20mm OD Small Flat Washers, (4) 10mm Lock Washers and (4) 10mm Hex Nuts, **(Figure 7)**. Snug but do not tighten hardware at this time.
5. Level and adjust the Bull Bar properly and tighten all hardware.
6. Do periodic inspections to the installation to make sure that all hardware is secure and tight.

To protect your investment, wax this product after installing. Regular waxing is recommended to add a protective layer over the finish. Do not use any type of polish or wax that may contain abrasives that could damage the finish.
For stainless steel: Aluminum polish may be used to polish small scratches and scuffs on the finish. Mild soap may be used also to clean the Bull Bar.
For gloss black finishes: Mild soap may be used to clean the Bull Bar.

Driver Side Installation Pictured

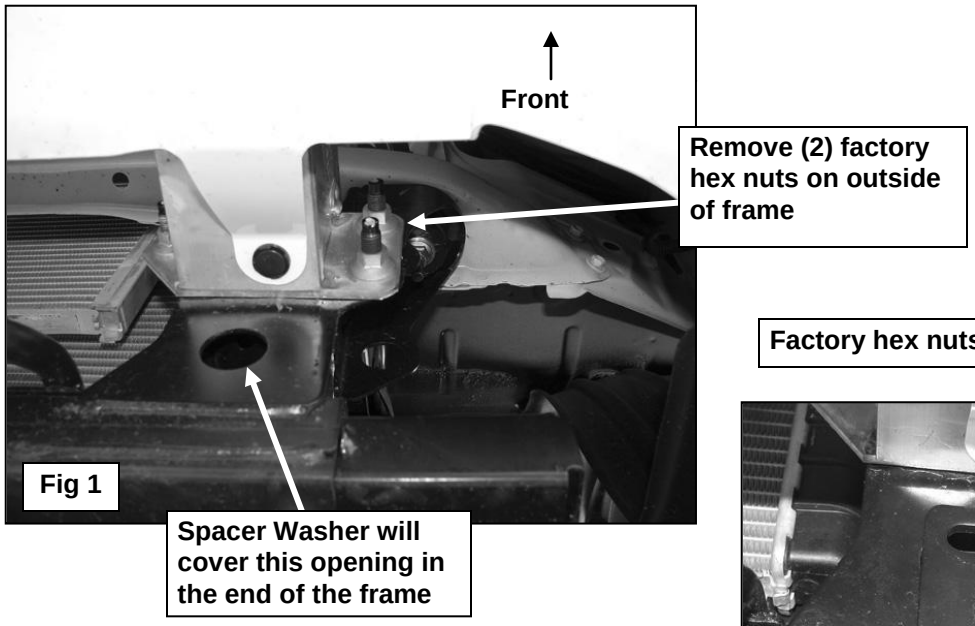

Fig 1

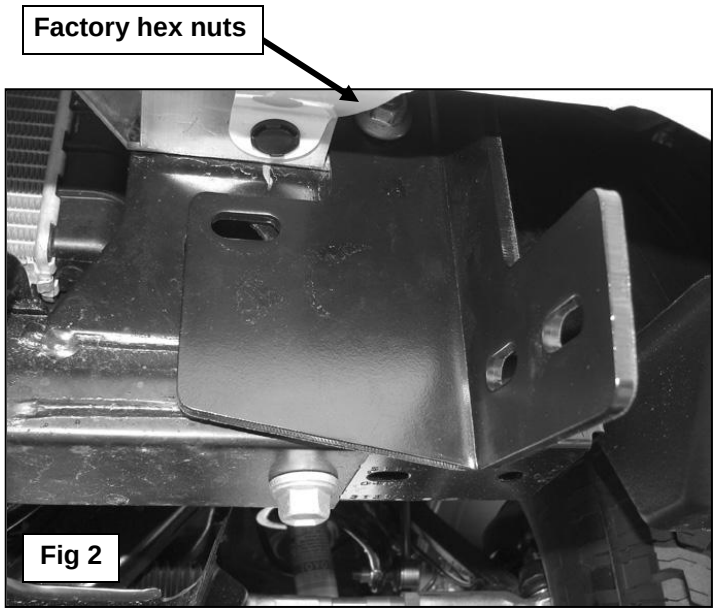

Fig 2

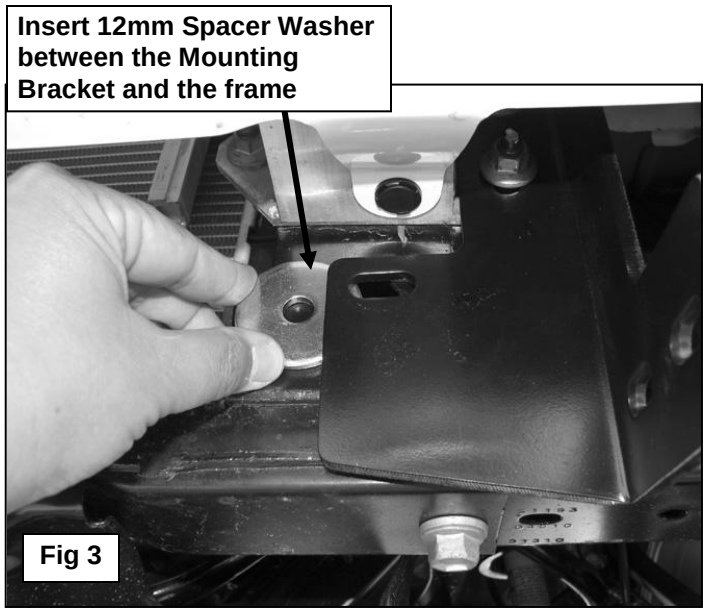

Fig 3

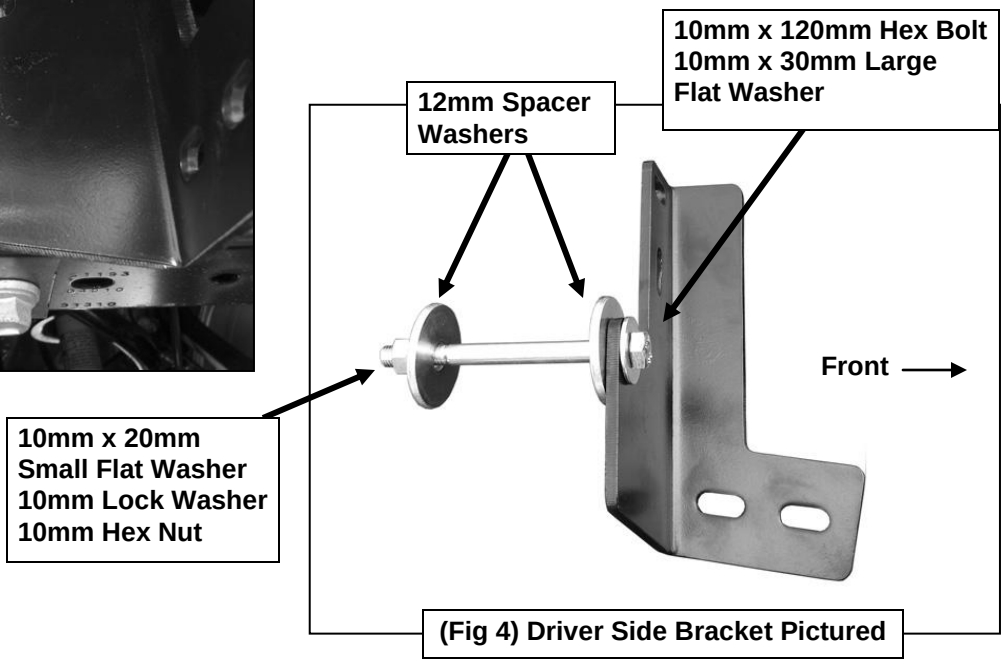

(Fig 4) Driver Side Bracket Pictured

Driver Side Installation Pictured

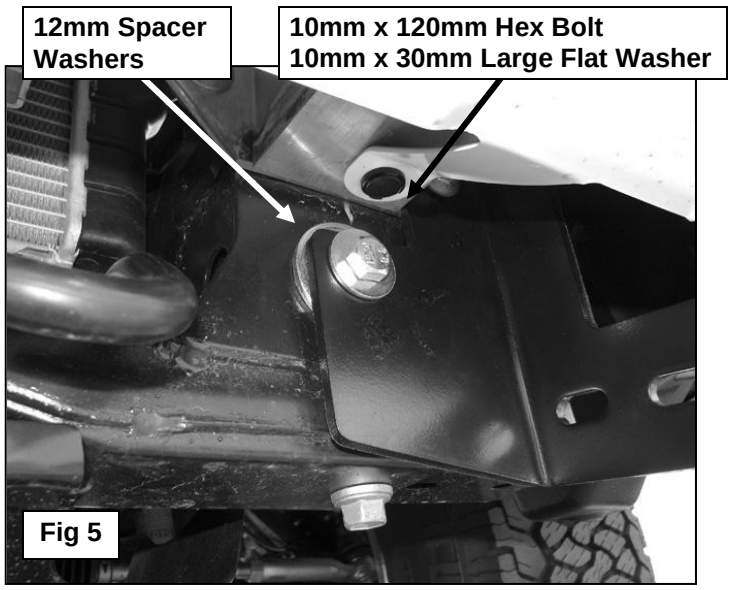

Fig 5

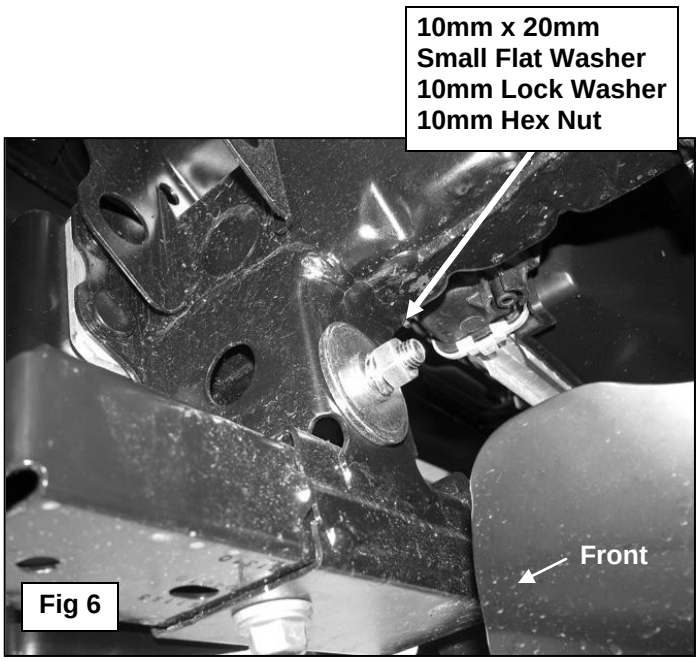

Fig 6

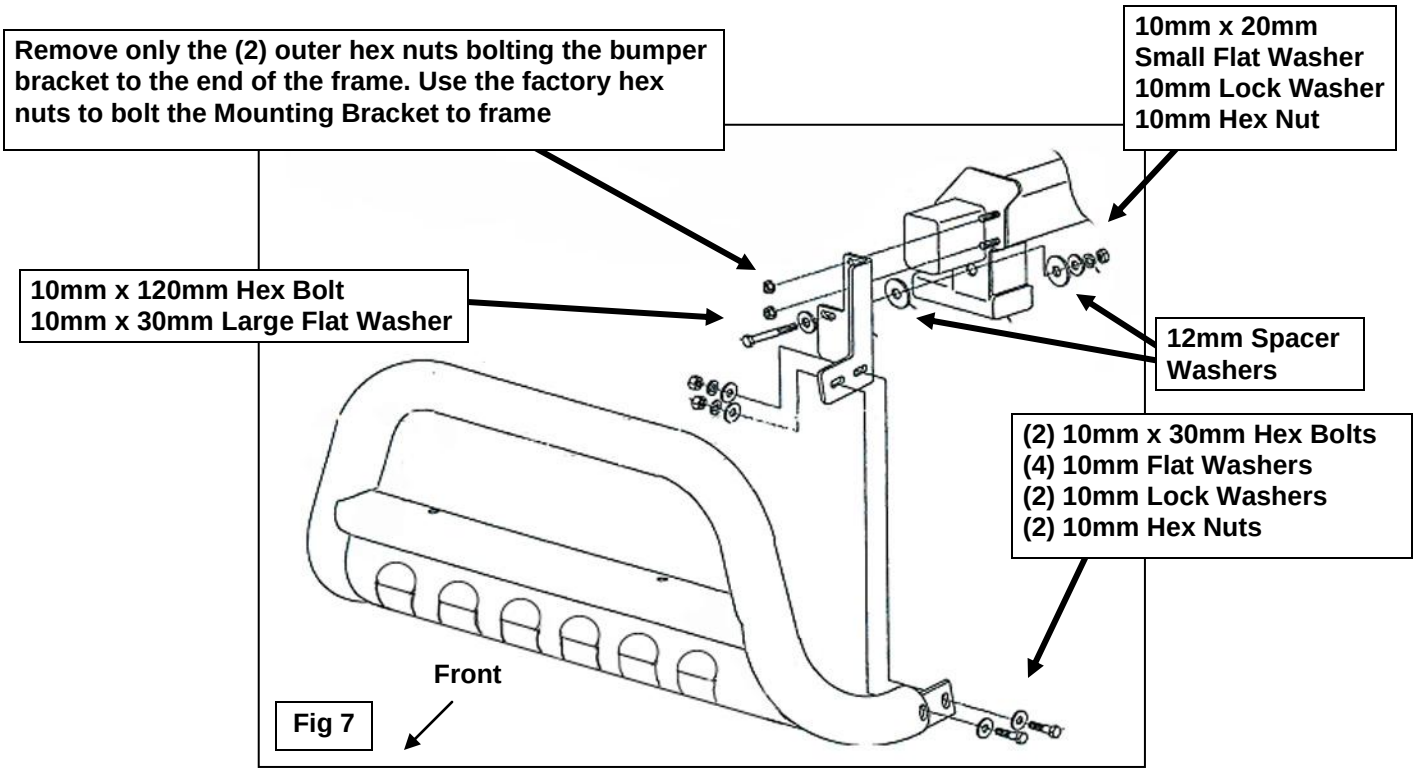

Fig 7